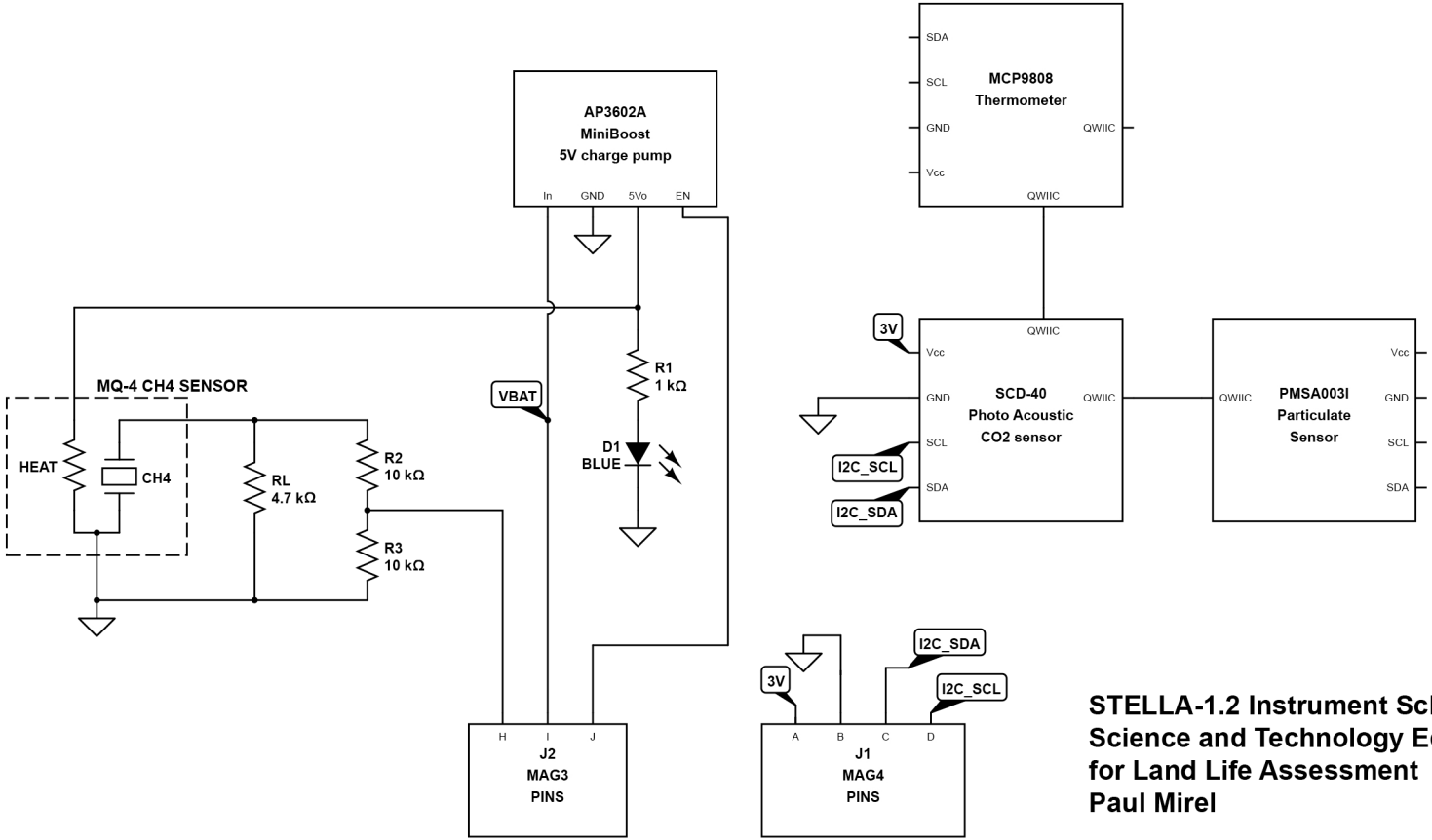

STELLA-1.2 Instrument Schematic -- AA1 module
Science and Technology Education
for Land Life Assessment
Paul Mirel